DRAWING NO. DCAK032

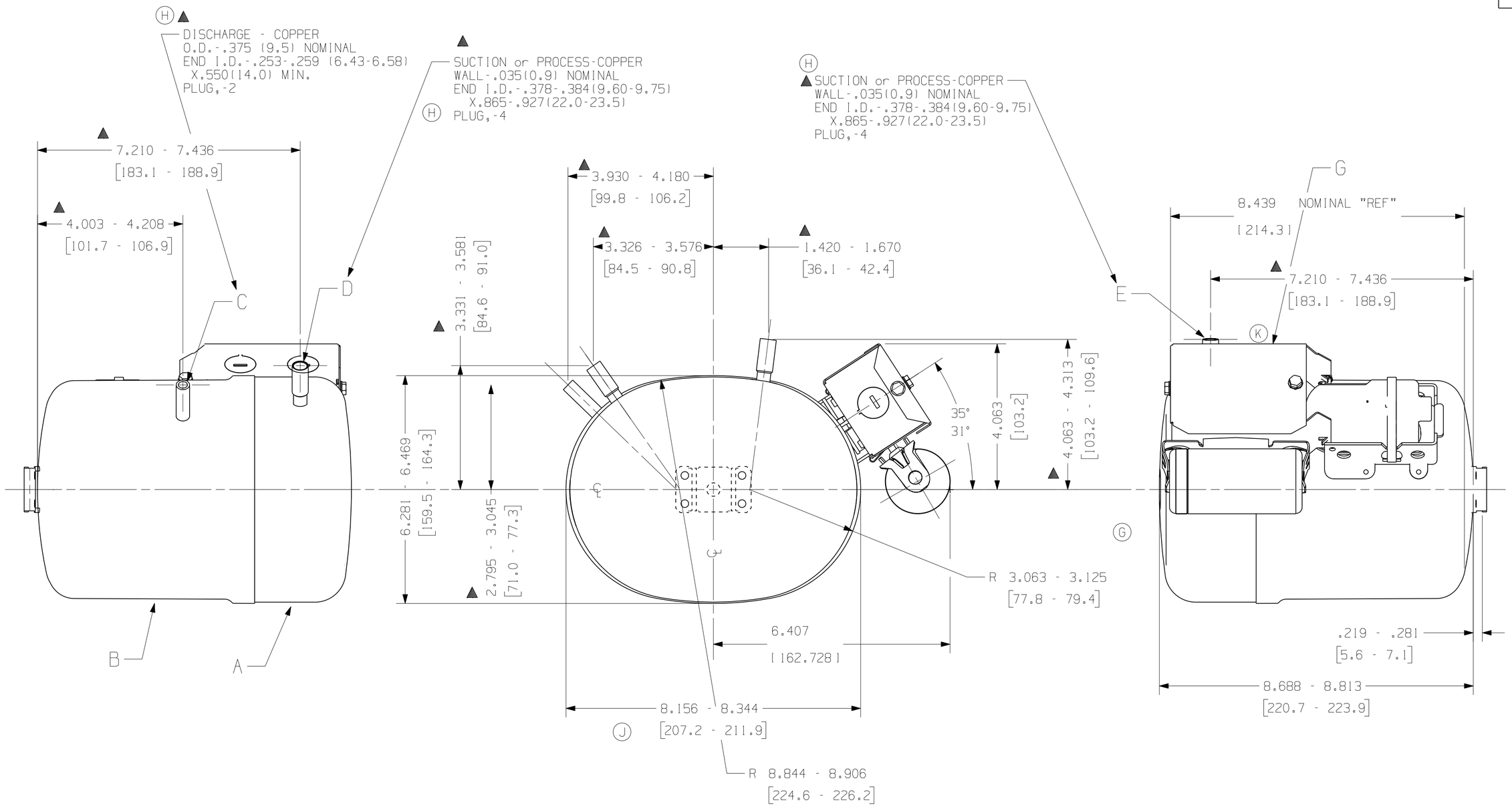

MANUFACTURING NOTES!
1.SEE SPEC. "A-B" & "A-C" FOR PROCESSING.

NOTE!

1. IF SPECIFIED ON BILL OF MATERIAL ASSEMBLE THESE PARTS AS SHOWN.
(K) ▲ 2. MUST COMPLY WITH T.P.Co. GLOBAL SPEC. 08.

DIMENSIONS: INCHES / MILLIMETERS OR INCHES-(MILLIMETERS)

(E)		A	32103-6	
G	DGAE1904	B	HA588-2	
(F)		C	34719	
		D	34718	
		E	34718	

3D, VNX6

ENGLISH

Q.A. SYMBOLS
★ = CATEGORY I
▲ = CATEGORY II
■ = CATEGORY III
= CATEGORY IV

AK

LT	LC	CHANGE	DATE
K	—	EC29368 REDRAWN IN 3D & RELAYOUT ADDED GLOBAL SPEC. 08	TS 22JUN12
J	5C	#236983-000 207.2-211.9 WAS 224.6-226.2	REYES 4/27/98
H	7F 6F 4F	#234874 REVISED TUBE TOLERANCES	N.L.D 9-11-96
G	—	#234295 REMOVED CAPACITOR CLIP	SJS 4/17/96
F	—	26070 SPRING CLIP REMOVED #225731	HMS 6/23/92
E	—	28677-1 BASE BASE REMOVED #225731	HMB 6/23/92
D	—	#219824 ADDED Q.A.SYM	R.E.S 6/6/89
C	—	REVISED TO SHOW SELECT BOX ASSY. & MTG.PLATE ADDED #218419	HB 80/30/88
B	—	REDRAWN #212377	—

THIS DRAWING OR PRINT (II) IS THE PROPERTY OF TECUMSEH PRODUCTS COMPANY AND CONTAINS PROPRIETARY AND CONFIDENTIAL INFORMATION. (III) THIS MADE AVAILABLE TO THE RECIPIENT ON THE EXPRESS AND SPECIFIC CONDITION THAT THE RECIPIENT NOR THE INFORMATION CONTAINED THEREIN SHALL NOT BE DISCLOSED OR MADE AVAILABLE TO OTHERS WITHOUT THE EXPRESS AND SPECIFIC WRITTEN CONSENT OF TECUMSEH AND THAT SUCH INFORMATION SHALL NOT BE USED IN ANY MANNER OTHER THAN IN WRITING BY TECUMSEH. APPROVED EXPRESSLY AND SPECIFICALLY AND NOT OTHERWISE. (IIII) SHALL NOT BE REPRODUCED IN ANY MANNER OR TO ANY EXTENT WITHOUT SPECIFIC WRITTEN CONSENT AND SHALL BE RETURNED BY THE RECIPIENT TO TECUMSEH UPON TECUMSEH'S OR THE LATTER'S REQUEST PROMPTLY AFTER SUCH REQUEST IS MADE.

DIS.CODE 34D

NAME SALES COMPRESSOR

DWN.	CK.	APR.	SCALE
BRODERICK 8/30/88	McCAUGHEY 9/12/96	BLANDEN 9/12/96	1/2"=1

THIS PRINT SUPERSEDES ALL PRINTS PRIOR TO

TECUMSEH PRODUCTS CO.
ANN ARBOR, MICHIGAN

MATERIAL

DRAWING NO. DCAK032

UNLESS OTHERWISE STATED DRAWING MATERIALS MUST NOT BE MAGNETIZED AS REQUIRED FOR PROPER COMPRESSOR ASSEMBLY.

BANNER